Data Sheet

Article number: 201341058
Description: E+G Klee latch clamp,
GN 851.1-160-T3 with latch, with catch

Measures

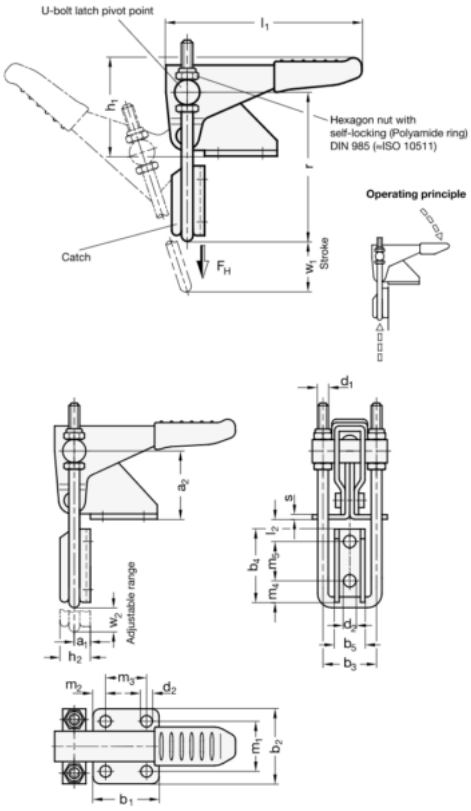

b2	= 35
d1	= M4
h1	= 37
l1	= 68
Newton	= 1600
r	= 35*
w2	= 10*
with standard latch	= With standart latch

Product drawings and brochures of any kind may contain errors for which Brd. Klee A/S cannot be liable.